SS Case

MIEPL make Master Pressure Gauge are used in Industrial Test Labs and Calibration labs.
Precision measuring system, High Resolution Dial, Knife Eager Pointer, Ani-Parallax mirror band with high accuracy class.



FEATURES

- Precision measuring system
- High resolution dial
- Knife Edge pointer
- Anti-parallax mirror band
- Jewel bearing movement
- Easy to read scale

APPLICATION

- Calibration & testing labs
- Calibration & testing of industrial pressure gauges

REFERENCE

- EN 837-1

STANDARD SPECIFICATIONS

Dial size	:	Dn150 / DN250
Range	:	-1...700 bar
Mounting pattern	:	Direct, Bottom connection
Process connection	:	½" NPT (M) / ½" BSP (M)
Ingress protection	:	IP 65
Execution	:	Dry
Carrying case	:	Wooden carrying case
Calibration certificate	:	Calibration certificate traceable up to National & International standards

STANDARD PARAMETERS

Accuracy	:	CL 0.25
Ambient Temperature	:	20...+65°C
Service Temperature	:	65°C max.
Pressure limits	:	Steady pressure up to 75% of FS value
Weld joints	:	Silver alloy brazing

MATERIAL OF CONSTRUCTION

Sensing Element	:	Bourdon Tube (<100 bar : C - type , >100 bar : Helical)
Case & Ring material	:	AISI 304 SS (Bayonet type)
Bourdon tube	:	Beryllium Copper
Shank	:	Copper alloy
Integral dampening screw	:	Copper alloy
Movement mechanism	:	High precision (Jewel bearing type)
Dial	:	Aluminum, green with black marking & anti-parallax mirror band
Pointer	:	Balanced, knife-edge micrometer adjustable
Pointer stopper	:	Spring type
Gaskets, Blow off disc	:	NBR
Window	:	Safety glass

TEMPERATURE EFFECT

Please refer clause no 9.3 of EN 837-1

DRAWING

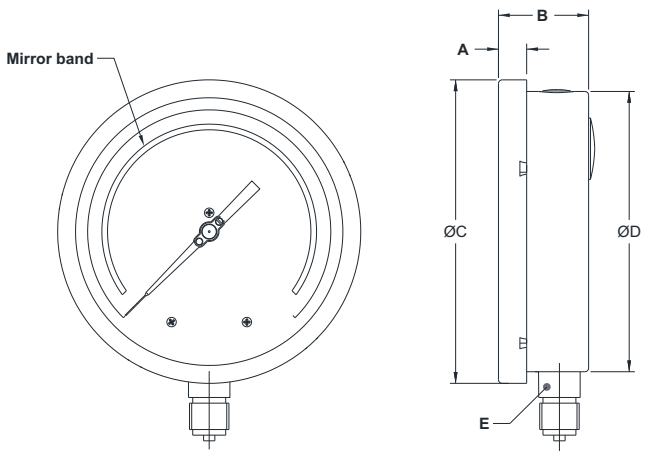

Type - 1A		
DN	150	250
A	15	18.5
B	48	50
øC	161	263
øD	149	250
E	SQ. 22	SQ. 22
Weight (gm)	970	2160

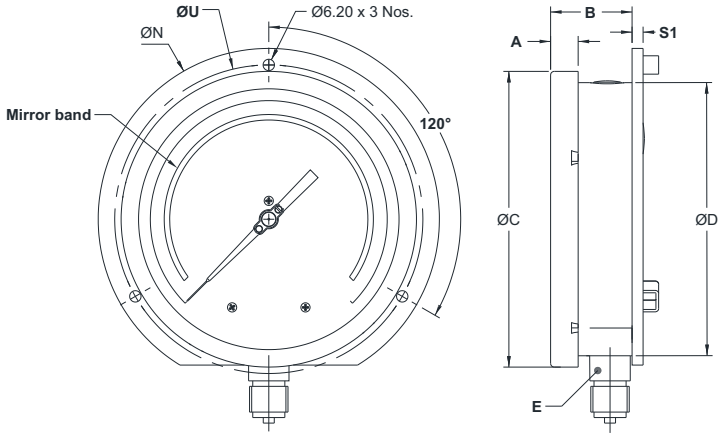

Type - 1B		
DN	150	250
A	15	18.5
B	46	48
ØC	161	263
ØD	149	250
E	SQ.22	SQ.22
ØI	6	7
M	172.4	286.5
ØN	186	290
S1	6	1.5
ØU	168	276
Weight (gm)	1080	2390

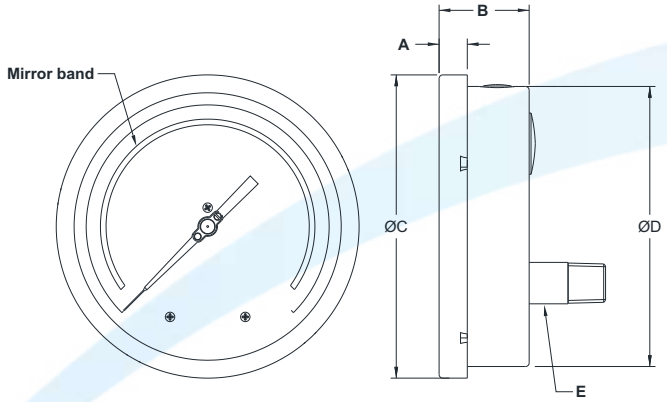

Type - 2E		
DN	150	250
A	15	18.5
B	48	50
øC	161	263
øD	149	250
E	SQ. 22	SQ. 22
Weight (gm)	960	2160

DRAWING

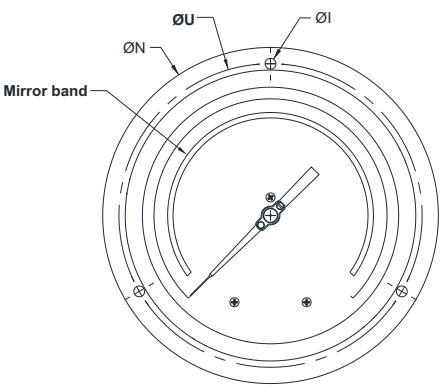

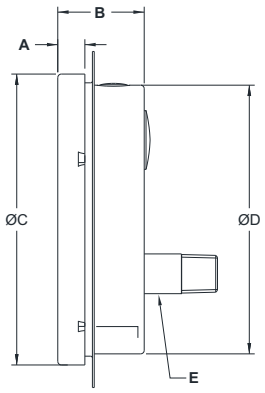

Type - 2F		
DN	150	250
A	15	18.5
B	48	50
ØC	161	263
ØD	149	250
E	SQ.22	SQ.22
ØI	6	7
ØN	186	290
ØU	168	276
Weight (gm)	1080	2370

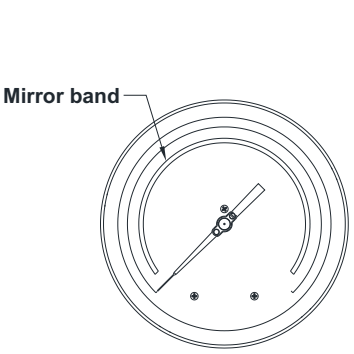

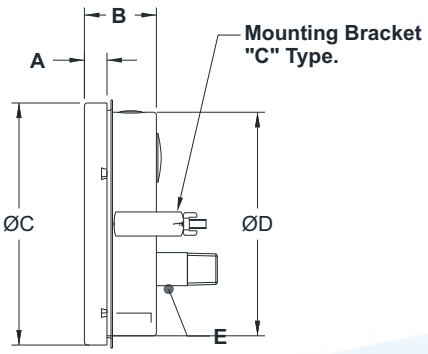

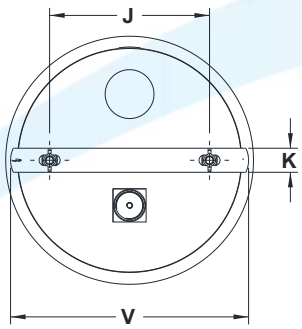

Type - 2G		
DN	150	250
A	15	18.5
B	48	50
ØC	161	263
ØD	149	250
E	SQ.22	SQ.22
J	106.5	180
K	161	30
V	58.5	270
Weight (gm)	1150	2450

ORDERING CODE

MP29 - F - XXX - 1A - 4NM - IP2 - E1

1. DIAL SIZE	150 mm / 6"	F					
	250 mm / 10"	H					
2. RANGE	**Refer "Range Table"**		XXX				
3. MOUNTING PATTERN	Direct, Bottom connection			1A			
	Wall/Surface/Projection mounting, Bottom connection			1B			
	Lower, Back connection			2E			
	Panel/Front flange mounting, Lower Back connection			2F			
	Panel/bracket mounting, Lower Back connection			2G			
4. PROCESS CONNECTION	¼" NPT (M)				2NM		
	½" NPT (M)				4NM		
	½" BSP (M)				4BM		
	M20 X 1.5 mm (M)				4MM		
	Other thread size and standards available on request.[1]						
5. INGRESS PROCESS	IP 65					IP2	
6. EXECUTION	Dry						E1

7. OTHER OPTIONS	Dampening screw, AISI 316 SS	DN	SS tag plate, AISI 304 SS	WF
	Cu-Alloy Shank	LA	Custom designed dial	WR
	AISI 316 SS shank	LF	Dial tag marking	WT

Ordering Example : **MP29 - F - XXX - 1A - 4NM - IP2 - E1**

1. For other connections, please contact factory.