Diaphragm

MIEPL make SS Pressure Gauges are based on the diaphragm arrangement for Isolation of liquid & widely used for high viscous & corrective area media.



FEATURES

- All SS measuring system
- Socket-case, direct welded
- Threaded / Flanged connection
- External zero adjustment

APPLICATION

- Liquid & gaseous mediums
- Corrosive environments
- Oil & Gas applications
- Chemical & Petrochemical
- Food & Beverages

REFERENCE

- EN 837-3

STANDARD SPECIFICATIONS

Dial size	:	DN100 / DN150
Range	:	-1...0...25 bar (type 1)
	:	60...600 mbar (type 2)
	:	6...40 mbar (type 3)
Mounting pattern	:	Direct, Bottom connection
Process connection	:	½" NPT (M) / ½" BSP (M)
Ingress protection	:	IP 54
Execution	:	Dry

STANDARD PARAMETERS

Accuracy	:	CL 1.6
Ambient Temperature	:	-40...+65°C
Service Temperature	:	100°C max.
Pressure limits	:	Steady pressure up to FS value
	:	Fluctuating pressure up to 90% of FS value
Weld joints	:	TIG argon arc welding

MATERIAL OF CONSTRUCTION

Sensing Element	:	Diaphragm
Case & Ring material	:	AISI 304 SS (Bayonet type)
Diaphragm	:	AISI 316 SS
Shank	:	AISI 316L SS (Welded directly to case)
Movement mechanism	:	AISI 304 SS
Dial	:	Aluminum, black graduation on white background
Pointer	:	Micro-adjuastable, aluminum, black powder coated
Gaskets, Blow off disc & filling plug	:	Neoprene / NBR
Window	:	Sheet glass

STANDARD SPECIFICATIONS : DAMPENING LIQUID FILLED, GLYCERIN

Window	:	Safety glass
Dampening liquid	:	Glycerin 99.7% [Service temperature up to 65°C]

TEMPERATURE EFFECT

Please refer clause no 9.3 of EN 837-1

DRAWING

DIMENSIONAL DRAWING

Type 1A

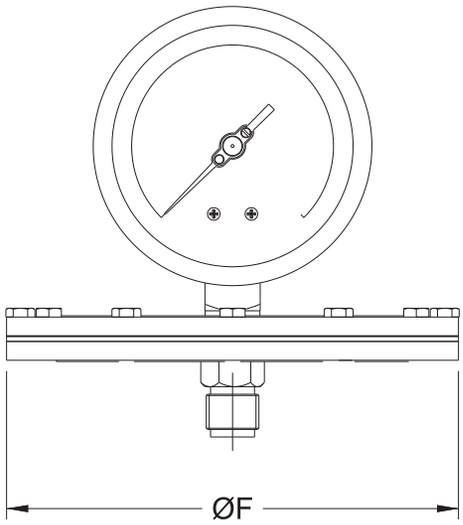

RANGE : 1 to 25 Bar		
DN	100	150
A	12	15
B	48	48
ØC	111	161
ØD	100	149
E	A/F 22	A/F 22
ØF	98	98
Weight (gm)	1570	1960

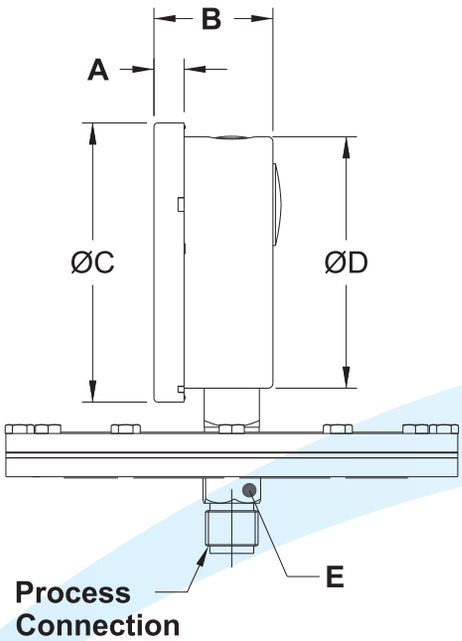

RANGE : Below 40mbar to 6mbar		
DN	100	150
A	12	15
B	48	48
ØC	111	161
ØD	100	149
E	A/F 22	A/F 22
ØF	180	180
Weight (gm)	2930	3320

RANGE : 40mbar to 60mbar		
DN	100	150
A	12	15
B	48	48
ØC	111	161
ØD	100	149
E	A/F 22	A/F 22
ØF	150	150
Weight (gm)	2260	2640

All dimensions are in mm.

DRAWING

DIMENSIONAL DRAWING

Type 1A

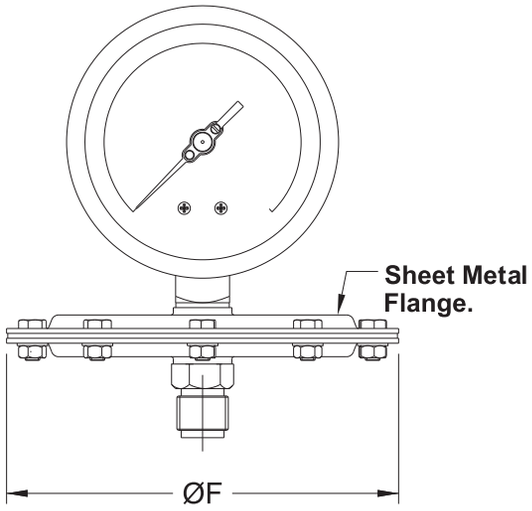

RANGE : 1 to 25 Bar		
DN	100	150
A	12	15
B	48	48
ØC	111	161
ØD	100	149
E	A/F 22	A/F 22
ØF	98	98
Weight (gm)	830	1220

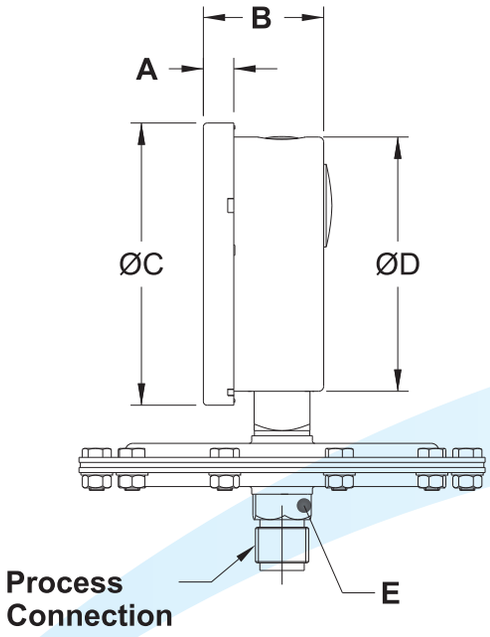

RANGE : Below 40mbar to 6mbar		
DN	100	150
A	12	15
B	48	48
ØC	111	161
ØD	100	149
E	A/F 22	A/F 22
ØF	180	180
Weight (gm)	1480	1820

RANGE : 40mbar to 600mbar		
DN	100	150
A	12	15
B	48	48
ØC	111	161
ØD	100	149
E	A/F 22	A/F 22
ØF	150	150
Weight (gm)	1600	1990

All dimensions are in mm.

ORDERING CODE

MP21 - D - XXX - 1A - 4NM - IP1 - E1

1. DIAL SIZE	100 mm	D
	150 mm	F
2. RANGE	**Refer "Range Table"**	XXX
3. MOUNTING PATTERN	Direct Bottom connection	1A
4. PROCESS CONNECTION	3/8" BSP (M)	3BM
	½" BSP (M)	4BM
	M20 X 1.5 mm (M)	4MM
	½" NPT (M)	4NM
	2" RF 150# as per ANSI B 16.5	A31
	3" RF 150# as per ANSI B 16.5	A43
	4" RF 150# as per ANSI B 16.5	A49
	2" RF 300# as per ANSI B 16.5	A32
	3" RF 300# as per ANSI B 16.5	A44
	4" RF 300# as per ANSI B 16.5	A50
	Other thread size and standards available on request.[1]	
5. INGRESS PROCESS	IP 54	IP1
	IP 65	IP2
6. EXECUTION	Dry[2]	E1
	Dampening liquid filled, glycerine	E4
	Dampening liquid filled, silicon oil[3]	E5

9. OTHER OPTIONS					
Case & Ring in AISI 316 SS (1A)	AA	AISI 316 SS movement	FL	Certification for Oxygen service	SO
Case & Ring in AISI 316 SS (1C)	AC	External zero adjustment	FZ	SS tag plate, AISI 304 SS	WF
Case & Ring in AISI 316 SS (2A)	AG	Rubber parts, Viton	QA	SS tag plate, AISI 316 SS	WG
Dampening screw, AISI 316 SS	DN	5 - point calibration certificate	SA	Custom designed dial	WR
Plexi glass	FB	Material test certificate 3.1	SC	Dial tag marking	WT
Shatterproof safety glass	FC	Material test certificate 2.2	SM		

Ordering Example : MP21 - D - XXX - 1A - 4NM - IP1 - E1

1. For other connections, please contact factory.
2. Available with Ingress Protection IP54 (Dust proof).
3. Rubber parts shall Viton.

MILLENNIUM INSTRUMENTS LIMITED
Tel : +91- 11- 220 143 25 / 27, Email : mil@miepl.com